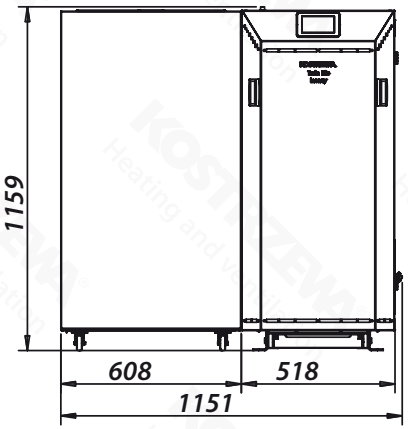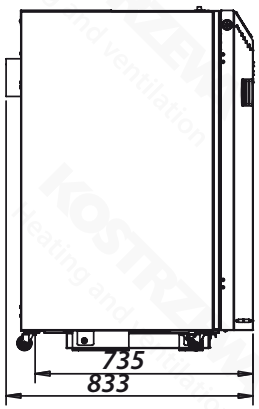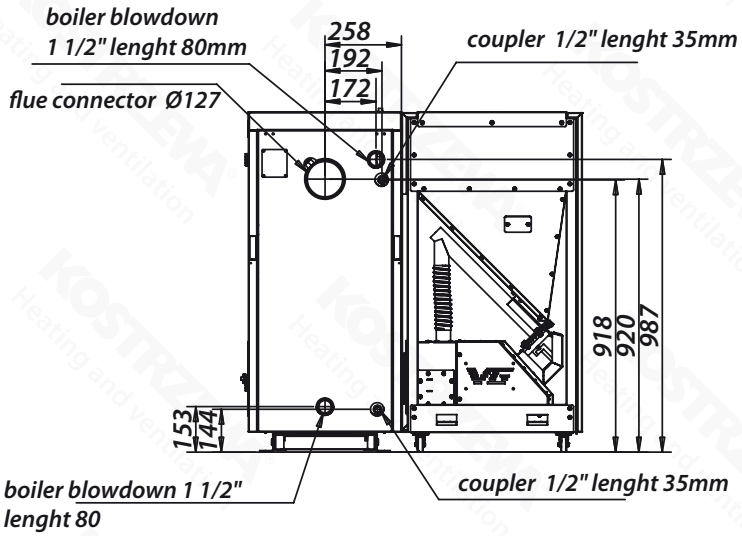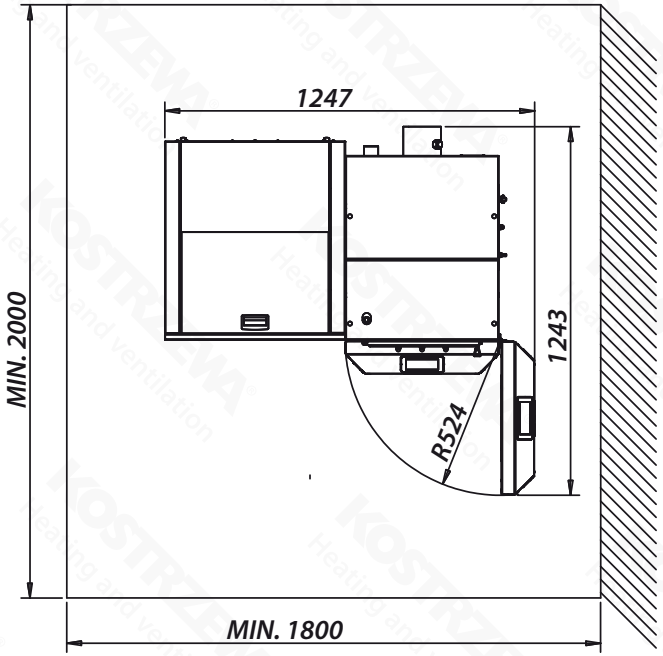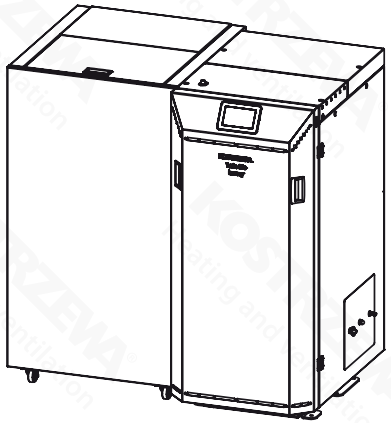Dimensions - Twin Bio Luxury Compact NE **10**